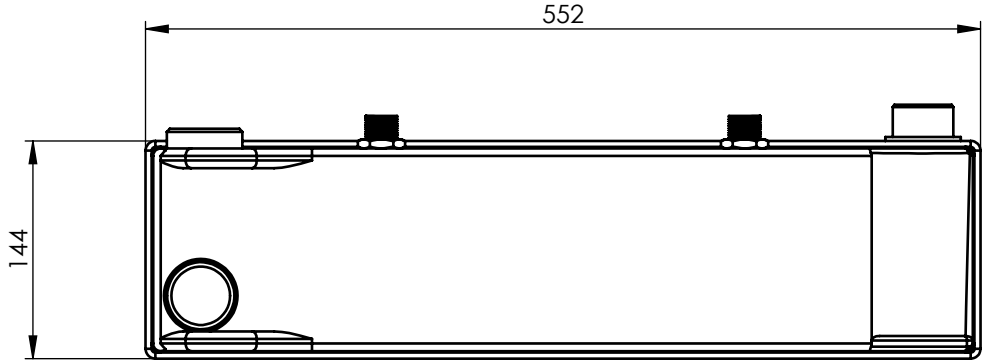
552
144

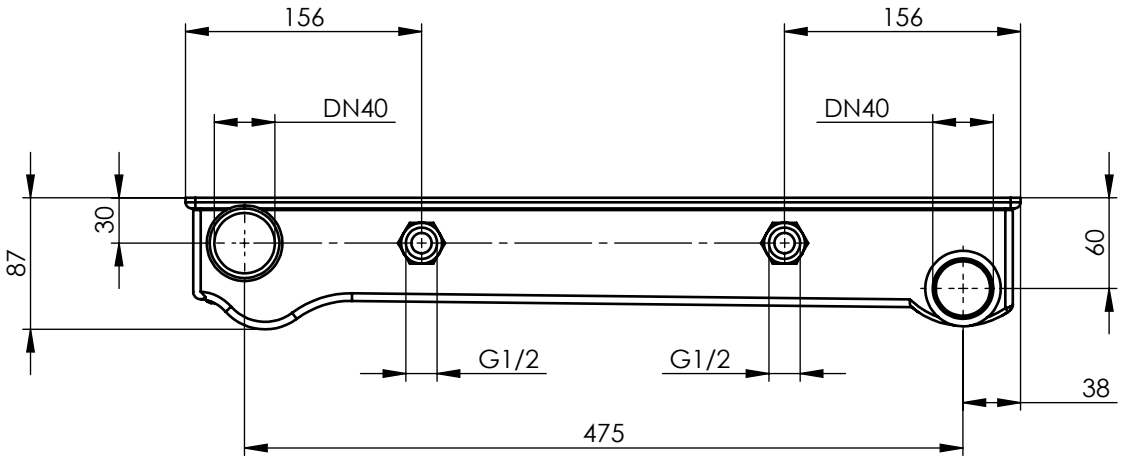
156
156
DN40
DN40
30
87
60
G1/2
G1/2
38
475